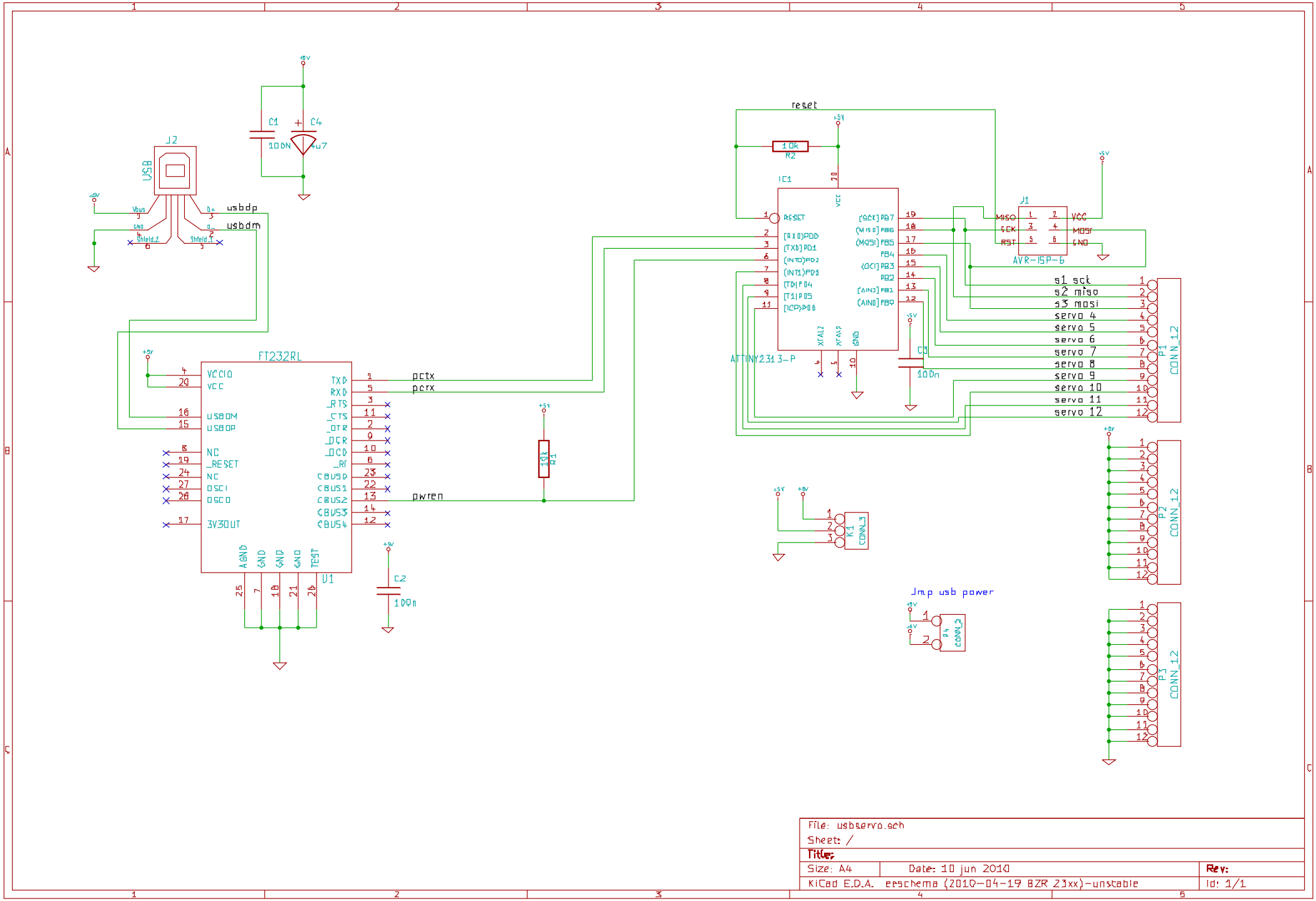

File: usbservo.sch		
Sheet: /		
Title:		
Size: A4	Date: 10 jun 2010	Rev:
KiCad E.D.A. eeschema (2010-04-19 BZR 2322)-unstable		Id: 1/1